ESSEM CORPORATION

PRODUCTS & SERVICES CATALOGUE

Empowering Quality Solutions.

Table of Contents

ESSEM CORPORATION

About Us

Essem Corporation Sdn. Bhd. Is a Malaysian-based, global service, supply & solutions provider to the oil & gas, energy and maritime industries. We are one of the leading specialists in surface wellheads Christmas tree maintenance services in South East Asia. Our main service programs cover extensive scope of work that is dedicated to maintain the integrity of any brand of surface wellhead systems.

Our extensive commitment to produce high-quality equipment and solutions is one of our top priority in solving any challenges. We constantly explore new and innovative ways to add value and enhance client's success while establishing economical solutions.

Our Mission

We endeavor to provide quality and excellent service through innovation and the adoption of new technologies and to ensure continued growth with our customers and be responsible to the need of our employees.

Our Vision

To be the region's leader in providing quality products and services in oil and gas and petrochemical industry involving offshore and onshore.

Knowledgeable, Trained and Certified

Ranging from periodic Preventive Maintenance (PM) plans to specific Corrective Maintenance (CM), repairs and refurbishment of your wellhead assets. Our team of more than 70 offshore-ready personnel are trained, knowledgeable and certified with more than 10 years of experience.

Systematic, Trackable & Holistic Maintenance Approach

Our approach to proper maintenance strategy and implementation ensures integrity of our clients' assets could be conserved in order for these assets to be safely utilized to the fullest.

Health, Safety and Environmental Policy

Essem Corporation is committed to ensure a safe and healthful workplace while protecting the environment. We recognize the importance of working proactively with employees, customers, the public, governments and others to emphasize the safety of employees and public.

Our business culture will continue to drive improvements of our global HSE procedures and principles. In all Essem Corp. operations, our most important objective is to supply highest standards to maximize the performance of our quality, health, safety and environment.

SAFETY SYSTEM CERTIFICATION DNV·GL OHSAS 18001

QUALITY SYSTEM CERTIFICATION DNV·GL ISO 9001

SERVICES

Wellhead
Preventive & Corrective Maintenance

Pipeline Valve
Preventive & Corrective Maintenance

Well
Plug & Abandonment

Flange
Online Tapping

Wellhead
Engineering Consultancy

WELLHEAD

Preventive & Corrective Maintenance

UPHOLDING WELL INTEGRITY

Ensuring reliable and safe operation while extending well production life.

Regular inspection and maintenance will ensure that oil and gas wellhead continue to operate in a safe and efficient manner well past its original field life.

In line with this, **Essem Corporation** offer a detailed Wellhead & Christmas Tree maintenance services for all existing sections including Casing Head, Casing Spool, Tubing Head and Christmas Tree

Preventive Maintenance

- Critical Device Function Test (CDFT) of all wellhead and Christmas valves
- Flushing, Greasing and Lubrication of wellhead and Christmas valves
- Cycling, Leak and Slam Test of Surface Controlled Subsurface Safety Valve (SCSSV), Tubing Retrievable Surface Controlled Subsurface Safety Valve (TRSCSSV) and Wireline Controlled Subsurface Safety Valve (WRSCSSV).
- Actuators function test
- Tubing Head Void Test
- Annulus Pressure Management
- Visual inspection

Corrective Maintenance

- Setting and retrieving of Back Pressure Valve (BPV), Two-Way Check Valve (TWC) and Valve Removal (VR) Plug
- Rectification and replacement of valves and actuators components on wellhead and Christmas tree
- Wellhead and Christmas tree valves change out
- Onshore refurbishment, fabrication, servicing and testing of valves and actuators

PIPELINE VALVE

Preventive & Corrective Maintenance

Proper valve maintenance is always vital, and pipeline valves are no exception. In the pipeline industry, integrity is about preventing spills and leaks making sure pipelines are maintained and operated to be as safe as possible.

This objective can be achieved with Essem Corporation's comprehensive maintenance service programmes for pipeline valves.

Corrective Maintenance

- Rectification and replacement of valves and actuators components on pipelines
- Pipeline valves change out
- Refurbishment, fabrication, servicing and testing of valves and actuators

Preserving assets and system functionality to greatly reduce risk of failure.

Preventive Maintenance

- Critical Device Function Test (CDFT) of all pipeline valves
- Flushing, Greasing and Lubrication of pipeline valves
- Actuators function test
- Visual Inspection
- Pressure / leak Test

GUARANTEEING OPERATION SAFETY AND RELIABILITY

WELL

Plug & Abandonment

It is well known that once a well no longer able to remain economically viable due to drop in production, operators are most likely to abandon that well by plug & abandonment.

In line with this, **Essem Corporation** offer services complementing well plug & abandonment. Essem Corporation is focused on delivering safe, reliable and cost-effective operations.

SAFE AND EFFICIENT PLUG & ABANDONMENT OF WELLS

Services

- Christmas Tree and Wellhead Nipple Down
- Crossovers / adaptors fabrication
- BOP nipple up / down
- Completion string retrieval
- Conductor retrieval

Ensuring reliable and safe operation while extending well production life.

FLANGE

Online Tapping

In the oil and gas industry, some wellheads casing valves that are connected to the conductor and surface casing head / spool are only installed with blind flanges and blind fittings. This results in no physical and safe access to monitor and manage the annulus pressure. In addition, there is no way to test the integrity of the casing valves.

In order to solve this challenge, **Essem Corporation** has developed a solution, **Flange Online Tapping,** that will be able to create an access point to the casing valve bore while maintaining safety as a top priority.

DELIVERING QUALITY SOLUTIONS

Preventing well integrity failure by annulus pressure management

Application

- This service is to establish a safe communication or access by drilling through the flange outer diameter using special drilling machine and equipment to monitor the wellhead annulus pressure, with no interruption of service.

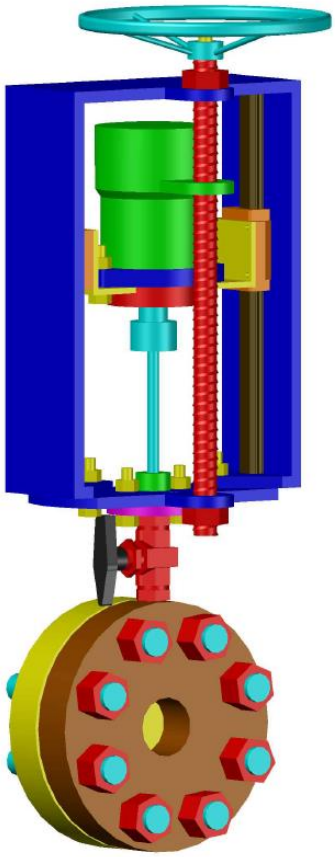

WELLHEAD

Engineering Consultancy

GUARANTEEING CLIENT'S SATISFACTION

Empowered with a team of experienced engineers, Essem Corporation brings together engineering and management skills to manage workplaces safely and efficiently. We offer a comprehensive suite of engineering consultancy services for the oil & gas industry, including engineering, procurement and project management.

In addition, we prioritize technical competence and focus on delivering services within schedule. We are customer driven, committed to delivering the best and most appropriate solutions effectively, for our clients' entire satisfaction.

Solving complex engineering challenges and services

Services

- Customized Pressure Diverting Chamber
- Olivals Training Centre (OTC)
- Design, Engineering and Fabrication
    - Wellhead Crossover
    - DSA
    - Trash Cap
    - Test Piece
    - Manual Override Tool
    - Riser

Olivals Training Centre (OTC)

In collaboration with Institut Teknologi Petronas (INSTEP) or Petronas Technical Institute, we offer one of the most comprehensive Wellhead & Xmas Tree Valve Maintenance Training Programme in Malaysia and the South East Asian Region.

ESSEM CORPORATION

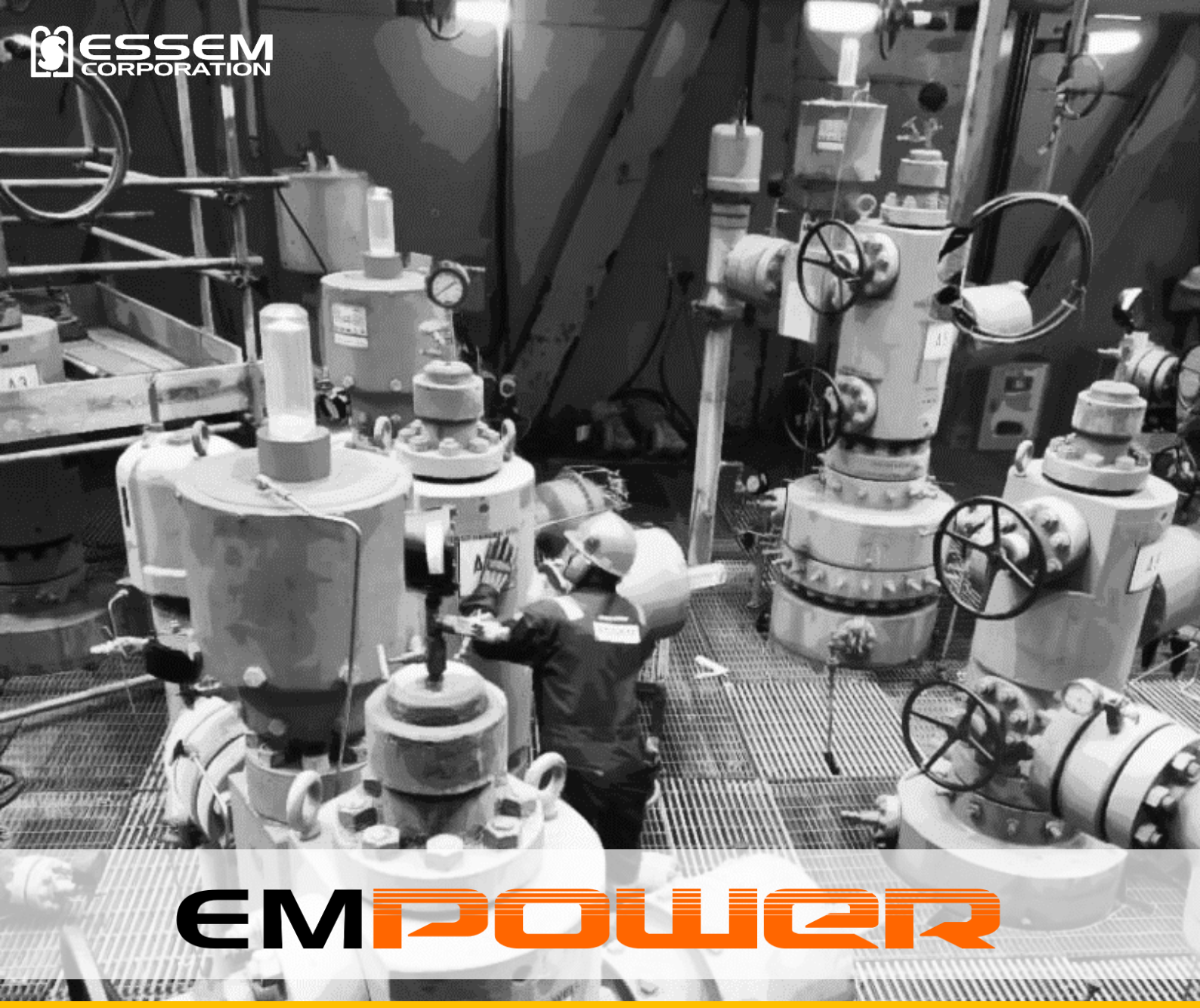

EMPOWER

PRODUCTS

Actuated Valve Removal (AVR) Plug

Telescopic VR (TVR) Lubricator

Coil Tubing Hanger (CTH)

Thru-Tubing ESP (TTESP)

Thru-Tubing Chemical Injection Valve (TTCIV)

Thru-Tubing Alternative Control Line System (TTACS

EMPOWER

Actuated Valve Removal (AVR) Plug

A SAFE & INNOVATIVE SOLUTION

A significant number of wells have been found to sustain casing pressures exceeding its Maximum Allowable Wellhead Operating Pressure (MAWOP) and this could occur due to a few factors such as thermal expansion, tubing-casing communication, packer seal leak or poor cementing job. This issue is unacceptable in order to comply to most well integrity policies which require double barriers (primary and secondary) between the hydrocarbon source and the environment.

Upholding wellhead integrity with effective casing pressure management.

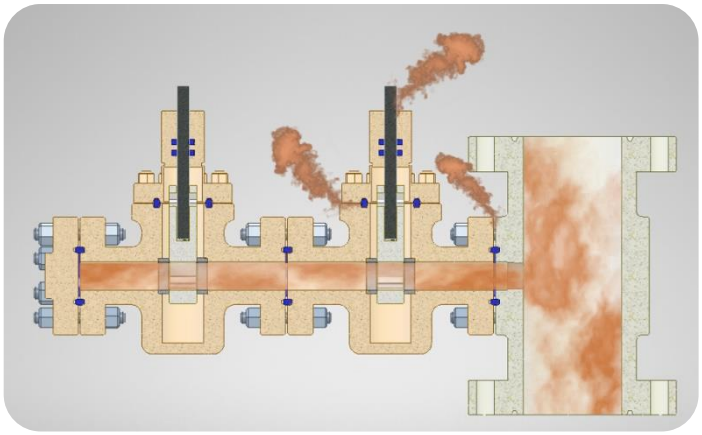

Applications

- This new technology utilizes an actuated VR plug with a check valve that will be installed at the VR profile of the casing spool and controlled **(manually or automatically)** in order to maintain the annulus within allowable operating pressure.
- With this, a safer operation & production can be achieved.

In almost every current wellhead configuration with Sustained Annulus Pressure (SAP), the side outlet valves (where ring gasket, bonnet seal and stem seal acts as the primary barriers) do not have any secondary barrier in case of ring gasket or stem seal failures.

Compliance to the double barrier policy can now be achieved with the application of **Essem's EMPOWER AVR Plug** as the primary barrier. In addition, the **EMPOWER AVR Plug** has the capability to manage casing annulus pressure, thus eliminating certain conditions that may lead to serious consequences such as underground blowouts.

Model:	AVR SYSTEM
Pressure Rating:	3000 psi / 5000 psi
Sealing Type:	AVR – Metal to Metal Piston Seal –O-ring
Conveyance Method:	VR Lubricator
Thread profile:	Ranging from 1 ¼" LP to 2 ½" LP
Design Compliance:	API 6A

Features & Benefits

- AVR plug comes with a ball and spring check valve to prevent flow from the casing annulus to downstream of the AVR plug, thus acting as a barrier from the annulus pressure.
- A hydraulic piston has been designed to actuate the check valve in order to bleed off pressure in the annulus.
- There are 2 types of AVR:
    1. Manual - operated by hydraulic hand pump
    2. Automatic - operated by Self Automated Monitoring Instrument (SAMI) system.
- Compatible to any casing head / spool application.
- Instantaneous result and monitoring of casing pressure.
- Time and cost saving solution.

HYDRAULIC PISTON
Designed to push the ball in order to bleed off the pressure and operated by hydraulic.

BLEED OFF PORT
This port is to allow excessive pressure to be bled off from the casing.

BALL (CHECK VALVE)
Designed to provide metal to metal seal and always be in close position which energized by spring.

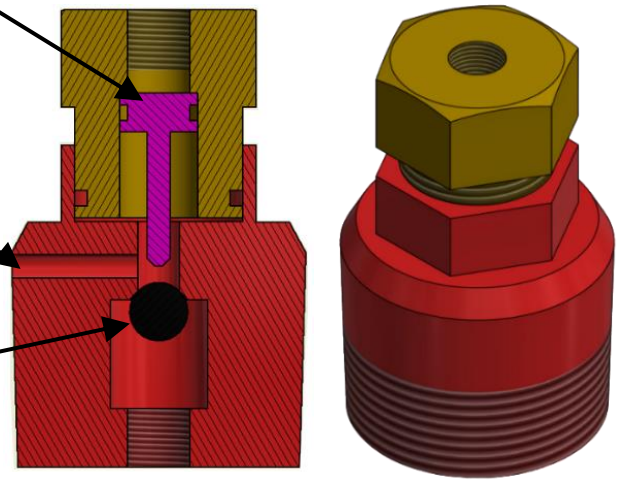

Installation Method

- The AVR plug is to be installed using VR lubricator at the existing VR thread of the casing spool in order to remove the existing wellhead valve body
- In order to actuate the check valve, the hydraulic piston is operated by pumping hydraulic pressure into the tubing line.

EMPOWER

Telescopic VR (TVR) Lubricator

EFFICIENT AND ECONOMICAL WELLHEAD INTEGRITY

Applications

- Similarly, to conventional VR lubricators, TVR lubricators are installed on casing valve outlet flange in order to install and remove VR plug through the open valve bore.
- Installation of VR plug at the casing head/spool will provide an additional barrier

Simplifying wellhead intervention in narrow and congested spaces while minimizing risks.

In order to provide an additional barrier prior to casing valve removal, VR plug will be installed using Valve Removal (VR) lubricators. However, there are limitations that arises with the usage of conventional VR lubricators due to factors such as the tools' long length, heavy weight and time-consuming installation.

In line with this, Essem Corporation has designed a solution, EMPOWER Telescopic VR (TVR) Lubricator that will ensure an improved, safer and quicker deployment and retrieval of VR plugs at any wellhead arrangement compared to conventional VR lubricators.

Features & Benefits

- Compact and short design: the length of the TVR lubricator is only 18" or 1.5 ft long.
- Lighter weight: the new 35 kg TVR lubricator will allow manual handling of the tool.
- Quicker installation: the time for the installation of the new TVR lubricator is estimated to only be 30 – 45 minutes.
- Easier operation: the TVR tool is only operated using custom made handle and hydraulic hand pump.
- Cost saving: no need for any relocation or dismantling of any obstructing pipe spool, beams or equipment.

Model:	TVR LUBRICATOR SYSTEM
Pressure Rating:	3000 psi / 5000psi
Stroke Length:	18.91” or 48 cm
Tool Length:	18” or 45.72 cm
Material:	Stainless Steel
Elastomers Material:	Teflon / Nitrile / Viton
Design Compliance:	API 6A

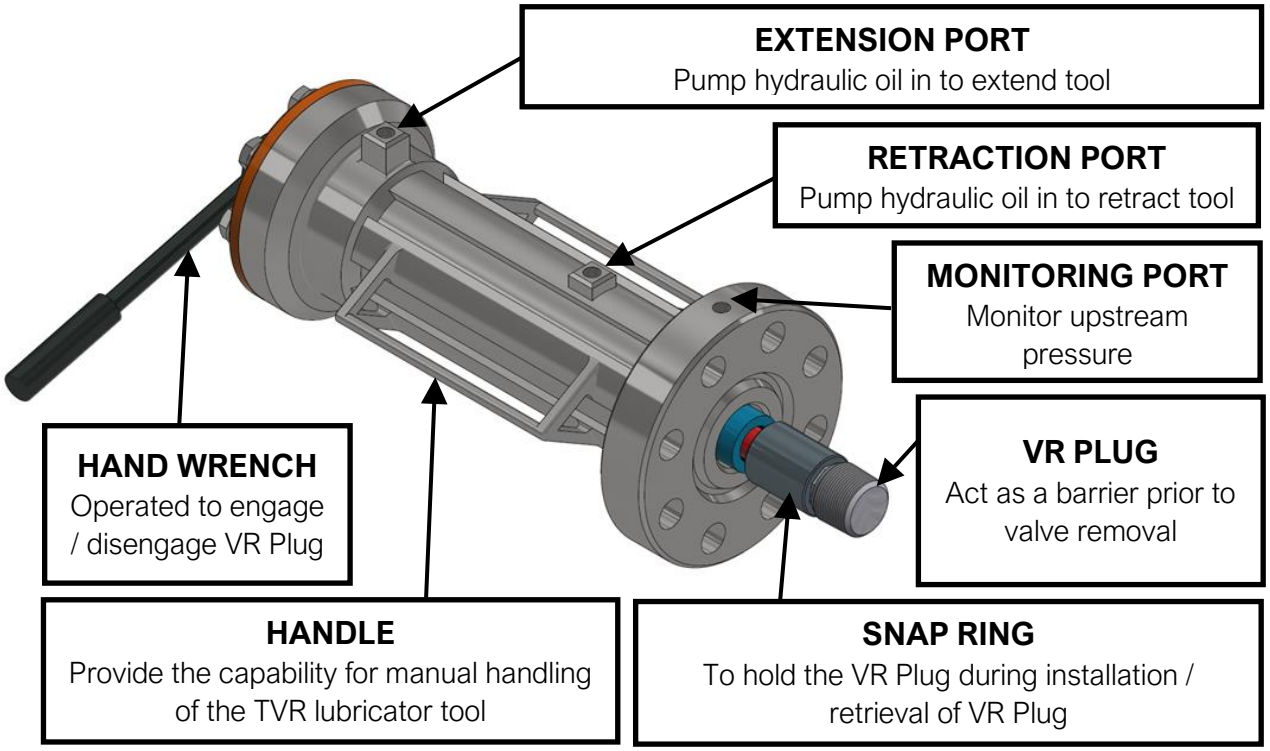

Installation Method

- TVR lubricators are installed on casing valve outlet flanges
- In order to extend or retract the TVR lubricator, double acting hydraulic hand pump is used to allow alternation of hydraulic fluid within the TVR lubricator and hand pump during pumping.

EMPOWER

Coil Tubing Hanger (CTH)

INCREASE RECOVERY AND ECONOMIC VIABILITY

Essem Corporation offer a dedicated equipment and service to ensure maximum production with economical solution while maintaining well integrity.

Mitigating multiple shallow leak issues using EMPOWER CTH can eliminate conditions that lead to workovers and lost production.

Applications

- EMPOWER CTH has been designed for the coil tubing termination at the Lower Master Valve (LMV) without removing the function of LMV as a barrier for Xmas tree valve rectification with BPV profile in placed at the CTH.
- The coil tubing hanger are used to suspend the load of the coil tubing and as well as sealing at the top/surface of the pack-off.

A solution with significant cost reduction without the need for expensive workovers.

Features & Benefits

- Modification of internal gate with locking profile internal diameter of gate bore and the length of the gate travel into valve body cavity.
- Run-in or pull-out of hole using GS tool via coil tubing unit (CTU)
- Available profile for BPV for maintenance purposes.
- Integrate with profile of coil tubing connector
- Locked mandrel according to API 14L
- No Rig requirement - minimal infrastructure is required to deploy a system and all tree functionality remains in place

Model:	CTH SYSTEM
Pressure Rating:	5000 psi
Material:	EE / FF class
Gate Valve Bore Size:	Ranging from 2 9/16" to 7 1/16"
Load Bearing Capability:	Min 2.5 Metric Ton
Conveyance Method:	2.5" GS Tool – Slickline or CTU
Design Compliance:	API 6A & API 14

Installation Method

- The Lower Master Valve (LMV) of the Christmas Tree will be modified to install the Coil Tubing Hanger (CTH).
- The CTH will suspend the load of the coil tubing string while providing proper sealing at the LMV.

CTH GS PROFILE
This profile will be used with GS Tool to latch the CTH during installation. This GS Profile will also be used to install a Back-Pressure Valve (BPV) for corrective maintenance.

CTH GATE
This CTH Gate is designed to hold the CTH and locking mandrel in place.

COIL TUBING HANGER (CTH)
Designed to suspend the coil tubing capillary and provide communication from the completion string tubing to the surface.

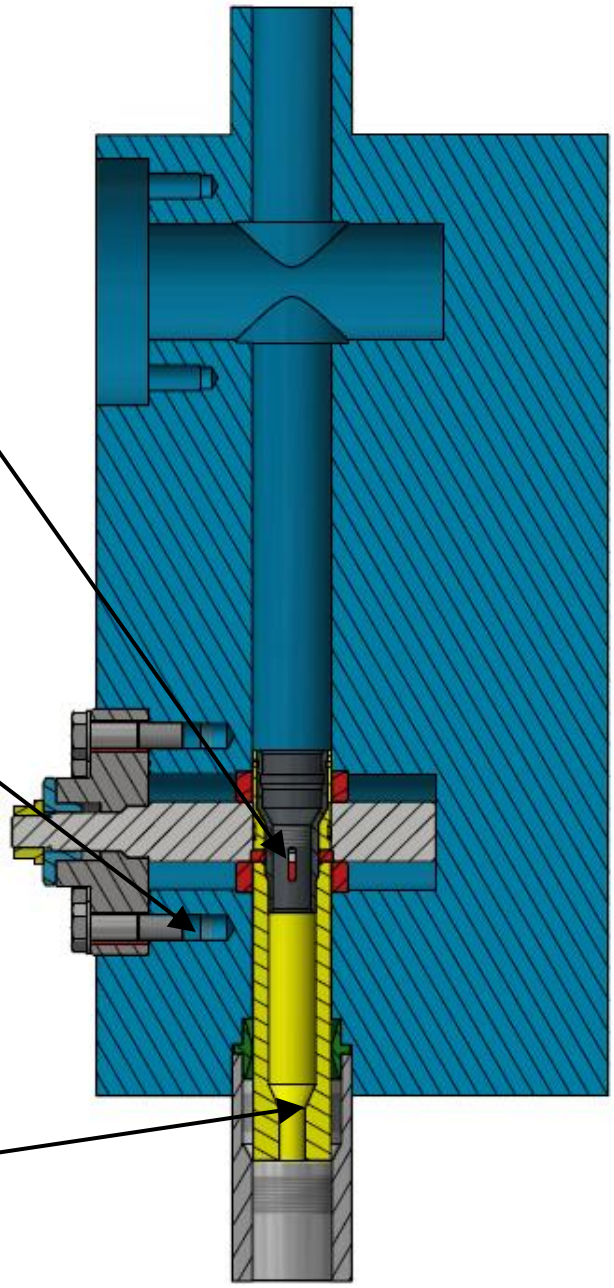

EMPOWER

Thru-Tubing ESP (TTESP) PENETRATOR

ESPs provide reliable artificial lift for a broad range of flow rates and well conditions. They are one of the most reliable, efficient methods for increasing production in many well types. However, conventional rig-deployed ESP takes a lot of time and money.

Essem's EMPOWER TTESP system offers a solution to ensure simple ESP cable deployment while eliminating the cost, time and personnel with conventional rig deployment.

MAXIMUM PRODUCTION UPTIME & RECOVERY

Applications

- Deployment of ESP cable through production tubing into live well using existing wellhead infrastructure to minimize lost production

A rig-less approach with maximum production with reduced risks and time.

Features & Benefits

- No Rig requirement - minimal infrastructure is required to deploy a system and all tree functionality remains in place
- Reduced installation time - faster deployment compared to conventional tubular completions
- Live well deployment through existing tree (allows full use of tree valves)
- Maintains master valves functionality
- Manage/maintain flow line height
- Accommodates existing penetrator stack up
- Minimal assembly of parts

Installation Method

- The Lower Master Valve (LMV) of the Christmas Tree will be modified to install the TTESP Penetrator system.
- The TTESP penetrator will also act as a hanger to suspend the TTESP assembly.
- The TTESP cable will be connected to the TTESP Cable Port at the TTESP Connector to provide communication to the TTESP Penetrator and assembly.

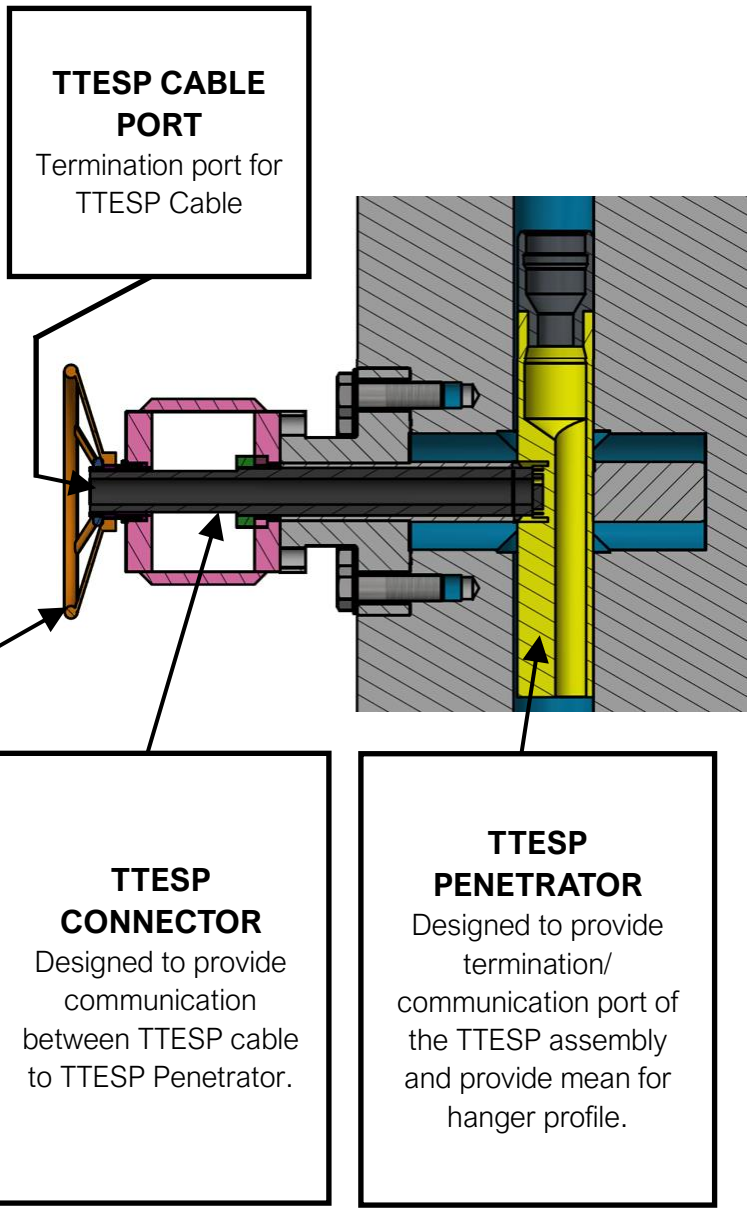

Model:	**TTESP PENETRATOR SYSTEM**
Pressure Rating:	5000 psi
Temperature Rating:	U class – 121 Deg. C (250 Deg. F)
Material:	EE / FF class
Gate Valve Bore Size:	Ranging from 3 1/8” to 7 1/16”
Load Bearing Capability:	Min 2.5 Metric Ton
Conveyance Method:	2.5” GS Tool – Slickline or CTU
Power Rating:	2.3kV (Uo) 4kV (U) 35 Amps
Design Compliance:	API 6A & API 14L

EMPOWER

Thru-Tubing Chemical Injection Valve (TTCIV)

In nearly every well's producing life, artificial lift will be needed to extend operation and maximize reservoir recovery. However, the efficiency of any artificial lift method is hampered by numerous costly problems, including corrosion, scale, paraffin and salt deposits that can lead to premature failure of the lift system.

Without a means of effectively pumping the right treatment chemicals precisely where they are needed, the risks of workovers and lost production rise, threatening the economic viability of the well.

Essem's EMPOWER TTCIV enables maximum production and reduce lifting costs by precisely and safely placing chemicals in the targeted wellbore while minimizing cost and risks.

MAXIMIZE PRODUCTION PERFORMANCE & INTEGRITY

Delivering chemicals to the source of the problem, and at the most effective depths, maximizes chemical effectiveness for each treatment.

Applications

- The injection of chemicals through coil tubing and downhole injection valve into tubing string
- EMPOWER TTCIV utilizes the Lower Master Valve (LMV) of Xmas tree for the termination and suspension of the TTCIV hanger without removing the function of LMV as a barrier for Xmas tree valve rectification with BPV profile in placed at the TTCIV Hanger.
- The TTCIV coil tubing hanger function by suspending the load of the tubing capillary as well as sealing the top/surface of the pack-off

Features & Benefits

- Operational versatility
- Increased reliability and efficiency
- Reduces chemical volume and costs through precise chemical placement and metering
- Maximize well production while protecting tubulars
- Low cost artificial lift method

Model:	TTCIV SYSTEM
Pressure Rating:	5000 psi
Material:	EE / FF class
Gate Valve Bore Size:	Ranging from 3 1/8” to 7 1/16”
Load Bearing Capability:	Min 2.5 Metric Ton
Conveyance Method:	Air Operated Winch & GS Tool
Design Compliance:	API 6A & API 14L

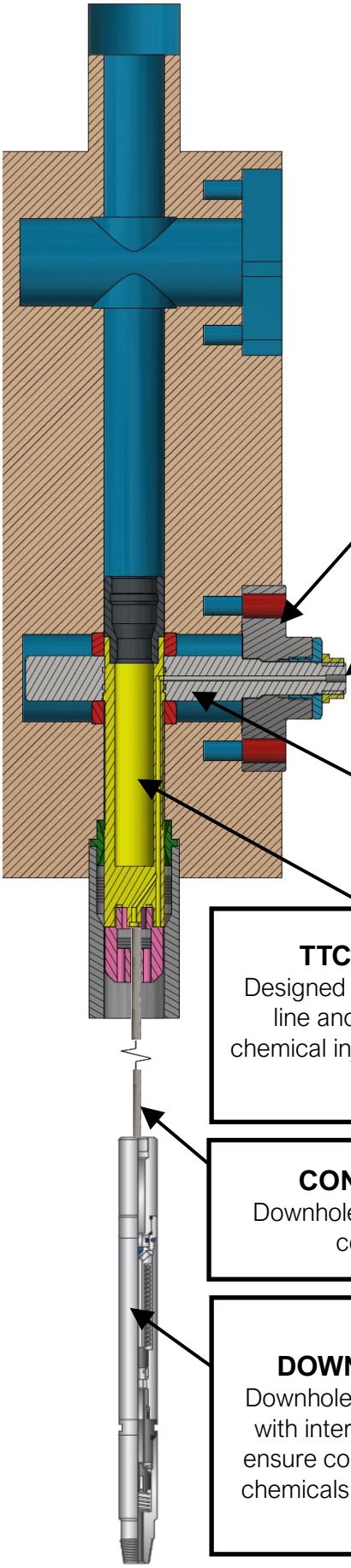

TTCIV BONNET
Designed to allow the flow of chemicals into the control line to the TTCIV system

CONTROL LINE PORT
Control line termination port.

TTCIV GATE
Designed to provide termination/ communication port of the control line and provide mean for hanger profile.

TTCIV HANGER
Designed to hang the control line and provide path of chemical injection in the control line.

CONTROL LINE
Downhole TTCIV RIH using control line.

DOWNHOLE TTCIV
Downhole TTCIV is designed with internal check valve to ensure consistent injection of chemicals via the control line.

Installation Method

- The Lower Master Valve (LMV) of the Christmas Tree will be modified to install the TTCIV system.
- A downhole TTCIV will be deployed using air operated winch inside the completion tubing and suspended by a control line tubing
- The control line tubing is then terminated and suspended at the TTCIV Gate & Hanger

EMPOWER

Thru-Tubing Alternative Control Line System (TTACS)

MAINTAIN SAFETY & MINIMIZE PRODUCTION LOSS

Over a period of time, some of the Subsurface Safety Valve (SCSSV) malfunctions due to control line issue. Conventional work over solution can be time consuming and expensive.

Essem Corporation's EMPOWER TTACS is an alternative solution that allows operators to install a substitute SCSSV and alternate control line without the expense of workovers.

Upholding safety & integrity with great cost saving impact.

Features & Benefits

- An alternative solution for wells having control line leaks
- No workover operation required
- Reduced installation time - faster deployment compared to conventional tubular completions
- Flexible setting depth of TTACS insert valve
- No requirement for space out
- No mast requirement (using air operated winch)
- Compatible with any type of completion string
- Cost-effective solution

Applications

- The existing bonnet and internal parts of the Lower Master Valve (LMV) to be customized with TTACS Hanger, TTACS bonnet and TTACS gate of the valve.
- The control line hanger is installed inside the tubing and land at No-go profile of the TTACS LMV.
- The substitute SCSSV will be deployed inside the tubing and suspended by a stainless-steel control line tubing and is set to the dedicated setting depth
- Deployment using single run control line with the TTACS SCSSV

Model:	TTACS SYSTEM
Pressure Rating:	5000 psi
Bore Diameter Size:	3.125 Inch
Gate Valve Bore Size:	2.562 Inch
Sealing Type:	Hanger – O-Ring Stem Packing – Packing Gland, Metal to Metal
Conveyance Method:	Air Operated Winch & GS Tool

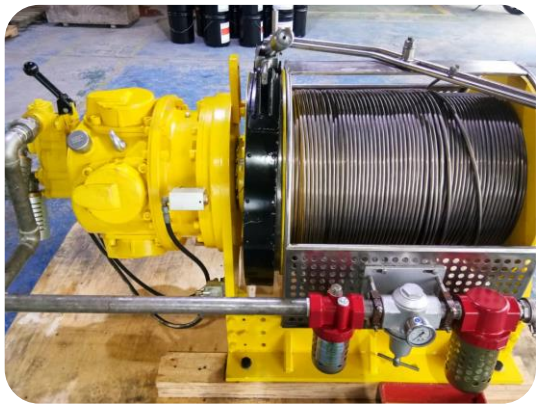

TTACS BONNET
Designed to allow communication of hydraulic control line to the TTACS system.

CONTROL LINE PORT
Hydraulic control line termination port.

TTACS GATE
Designed to provide termination/ communication port of the hydraulic control line to the system and provide mean for hanger profile.

TTACS HANGER
Designed to hang the control line and provide communication path of hydraulic control line to the system.

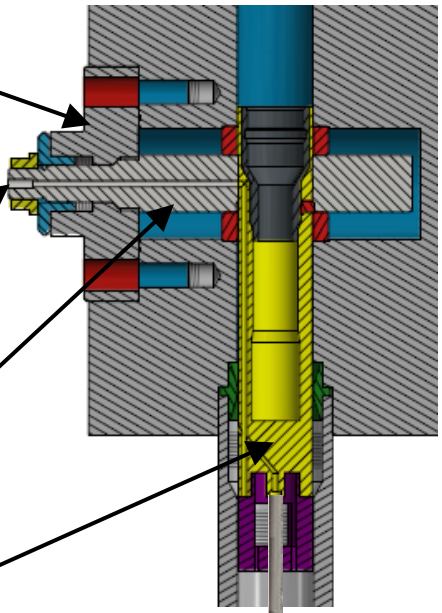

Installation Method

- The Lower Master Valve (LMV) of the Christmas Tree will be modified to install the TTACS system.
- A downhole SCSSV or insert valve will be deployed using air operated winch inside the completion tubing and suspended by a control line tubing
- The control line tubing is then terminated and suspended at the TTACS Gate & Hanger

CONTROL LINE
TTACS Insert valve RIH using control line

EXTERNAL SLIPS
Provide secure anchoring in tubing

PACKING ELEMENT
Pressure isolation anywhere in tubing

FAIL SAFE SYSTEM
Surface activated hydraulic control

FLAPPER BARRIER
Metal-To-Metal Sealing

ESSEM CORPORATION

"Many years of experience and a proven track record has allowed ESSEM to participate in and establish **great solutions** for our clients in the Oil & Gas, Energy and Petrochemical Industries."

TRACK RECORDS

WELLHEAD PREVENTIVE & CORRECTIVE MAINTENANCE

Client	Description	Location	Start Year	Duration
PETRONAS Carigali Sdn Bhd	Provision of Valve Maintenance Services	SKO	Jan 2020	3 Years
VESTIGO Petroleum Sdn Bhd	Provision of Wellhead Maintenance Services	Tembikai, Larut, Bentara, Berantai, Anjung Kecil Fields	June 2019	2 Years
SEA Hibiscus	Provision of Wellhead Maintenance Services	North Sabah EOR PSC, Sabah	Sept 2018	2 Years
EnQuest Petroleum Production Malaysia Ltd	Provision of Wellhead Maintenance Services	PM8E, Terengganu	March 2018	3 Years
Sabah Shell Petroleum Co. Ltd	Provision of Top Tension Riser Preservation and Maintenance Services for SSPC (Package C)	Malikai, Sabah	Nov 2017	3 Years
PETRONAS Carigali Sdn Bhd	Provision of Subsea Production Equipment Maintenance	Sarawak, Sabah, Labuan	Aug 2017	4 Years
PETRONAS Carigali (Turkmenistan) Sdn Bhd	Provision of Wellhead X-Mass Tree Maintenance for PC(T)SB	MDPA, WDPA, CDPA & MOPU, Turkmenistan	March 2016	3 Years
Sarawak Shell Berhad / Sabah Shell Petroleum Co. Ltd	Provision of Maintenance Services for GE Oil and Gas Subsea Assets	Sarawak, Sabah, Labuan	Oct 2016	5 Years
PTTEPI, Myanmar	Provision of Wellhead Maintenance Service	Zawtika, Myanmar	Sept 2015	2.5 Years
PETRONAS Carigali Sdn Bhd	Provision of Wellhead Maintenance Services for SBO & SKO Operations	SBO & SKO, Malaysia	Nov 2012	3+1+1 Years
PETRONAS Carigali Vietnam Limited	Provision Of On-Line Valve & Xmas Tree Maintenance, Greasing Services	Ruby & Thai binh, Vietnam	Jan 2011	3+1+1+1 Years

PIPELINE VALVE PREVENTIVE & CORRECTIVE MAINTENANCE

Client	Description	Location	Start Year	Duration
PETRONAS Gas Berhad	Actuated Ball Valve Servicing & Sealing	PGB Kimanis Operation Center, Sabah	June 2019	1 Month
PETRONAS Gas Berhad	Actuated Ball Valve Servicing & Sealing	PGB GTR Kertih Region, Terengganu	June 2019	4 Months
PETRONAS Gas Berhad	Plug Valve Servicing & Sealing	Kimanis Operation Center, Sabah	May 2019	1 Month
PETRONAS Gas Berhad	Urgent Service and Maintenance of Ball Valves and Plug Valves	PGB GTR Kuantan Region, Pahang	Feb 2019	2 Months
PETRONAS Gas Berhad	Actuated Ball Valve Servicing & Sealing	PGB Bintulu Operation Center, Sarawak	Feb 2019	2 Months
PETRONAS Gas Berhad	Actuated Ball Valve Servicing & Sealing	PGB Bintulu Operation Center, Sarawak	Nov 2018	1 Week
PETRONAS Gas Berhad	Actuated Ball Valve Servicing & Sealing	PGB GTR Miri Operation, Sarawak	Nov 2018	1 Week
PETRONAS Gas Berhad	Actuated Ball Valve Servicing & Sealing During Pig Launch	Kimanis Operation Center, Sabah	Oct 2018	2 Months
PETRONAS Gas Berhad	Actuated Ball Valve Servicing & Sealing	PGB GTR Miri Operation, Sarawak	Aug 2018	2 Weeks
PTTEP Sarawak Oil	Provision of Online Valve Leak Sealing Maintenance Services and Spare Parts	Sabah, Sarawak & Labuan	July 2018	3 Years
PETRONAS Gas Berhad	Actuated Ball Valve Servicing & Sealing	Kimanis Operation Center, Sabah	July 2018	2 Months
PETRONAS Gas Berhad	To Supply, Install and Services of NPS 12 Serck Audco Plug Valve Gear Box	PGB GTR Sitiawan Region, Perak	June 2018	3 Months
PETRONAS Gas Berhad	Major Service and Maintenance of Actuated Ball Valve	PGB GTR Shah Alam, Selangor	May 2018	2 Months
PETRONAS Gas Berhad	Actuated Ball Valve Servicing & Sealing	Kimanis Operation Center, Sabah	Jan 2018	1 Month

WELL PLUG & ABANDONMENT

Client	Description	Location	Start Year	Duration
PETRONAS Carigali Sdn Bhd	Well Plug & Abandonment (P&A) and Decommissioning Works of BHGE Vetcogray Subsea Asset	SKO	Jan 2020	1 Year
PETRONAS Carigali Sdn Bhd (Vantage Energy Services)	Provision of Well Abandonment Integrated Services for Kepong A	West Malaysia, PMA	April 2019	1 Year
ExxonMobil Exploration and Production Malaysia Inc (Halliburton)	Provision of Well Abandonment Integrated Services for Tabu A & Tabu B	West Malaysia, PMA	Feb 2019	2 Months
PETRONAS Carigali Sdn Bhd (Destini Oil Services)	Provision of Well Abandonment Integrated Services for Tabu A & Tabu B	West Malaysia, PMA	Sept 2018	1 Year

Empowering Quality Solutions.

ESSEM CORPORATION SDN. BHD.
C-7-1 Block C, Melawati Corporate Centre,
Taman Melawati, 53100 Kuala Lumpur,
Malaysia.
Tel: +603 4101 0200 Fax: +603 4101 0210

Website: www.essemgroup.net

Email: enquiry@essemgroup.net

LinkedIn: www.linkedin.com/company/essemgroup

Facebook: www.facebook.com/essemgroup

Instagram: www.instagram.com/essem_group